BC GAMES PENTICTON 2016 WINTER

M-60kg

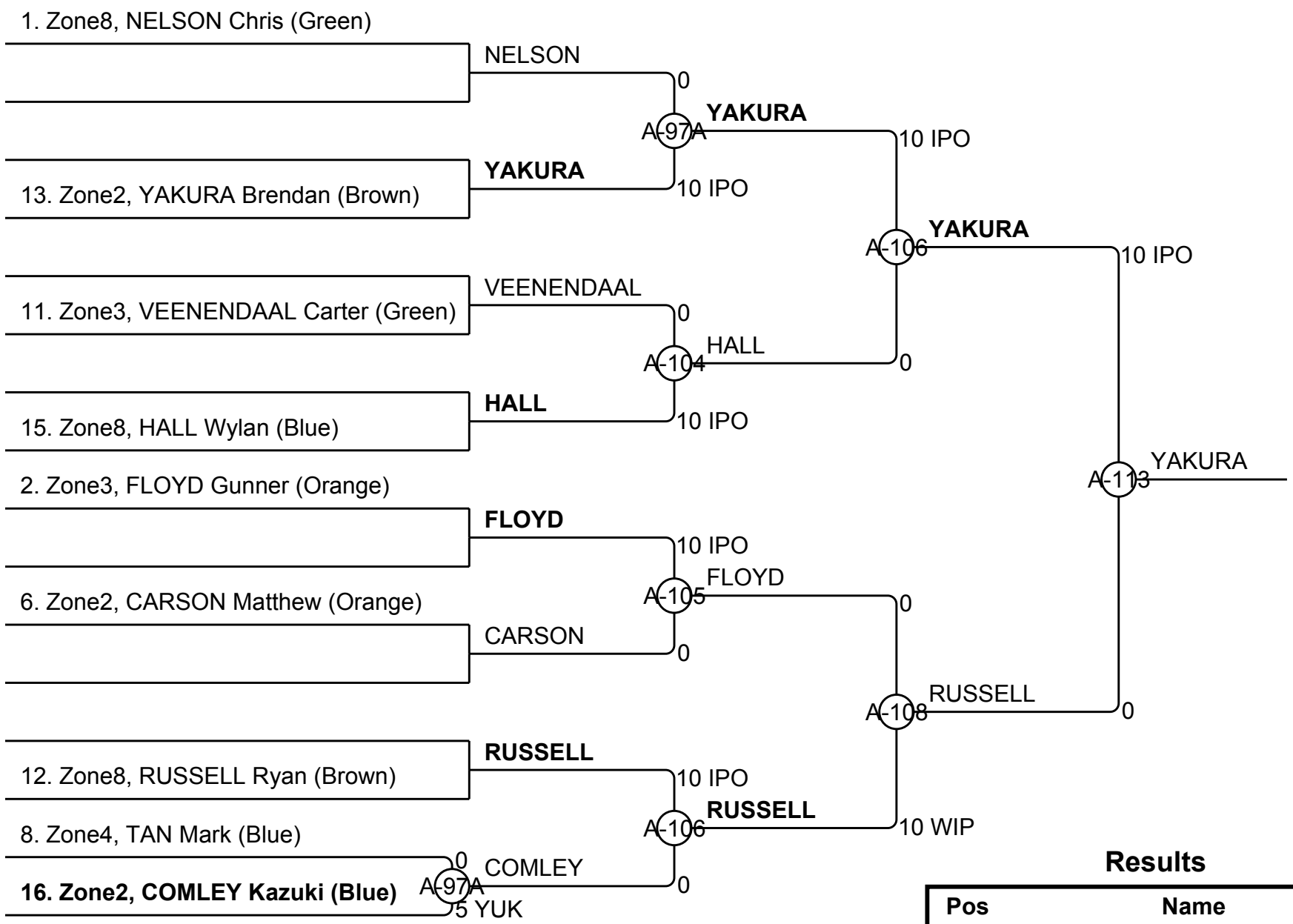

Results
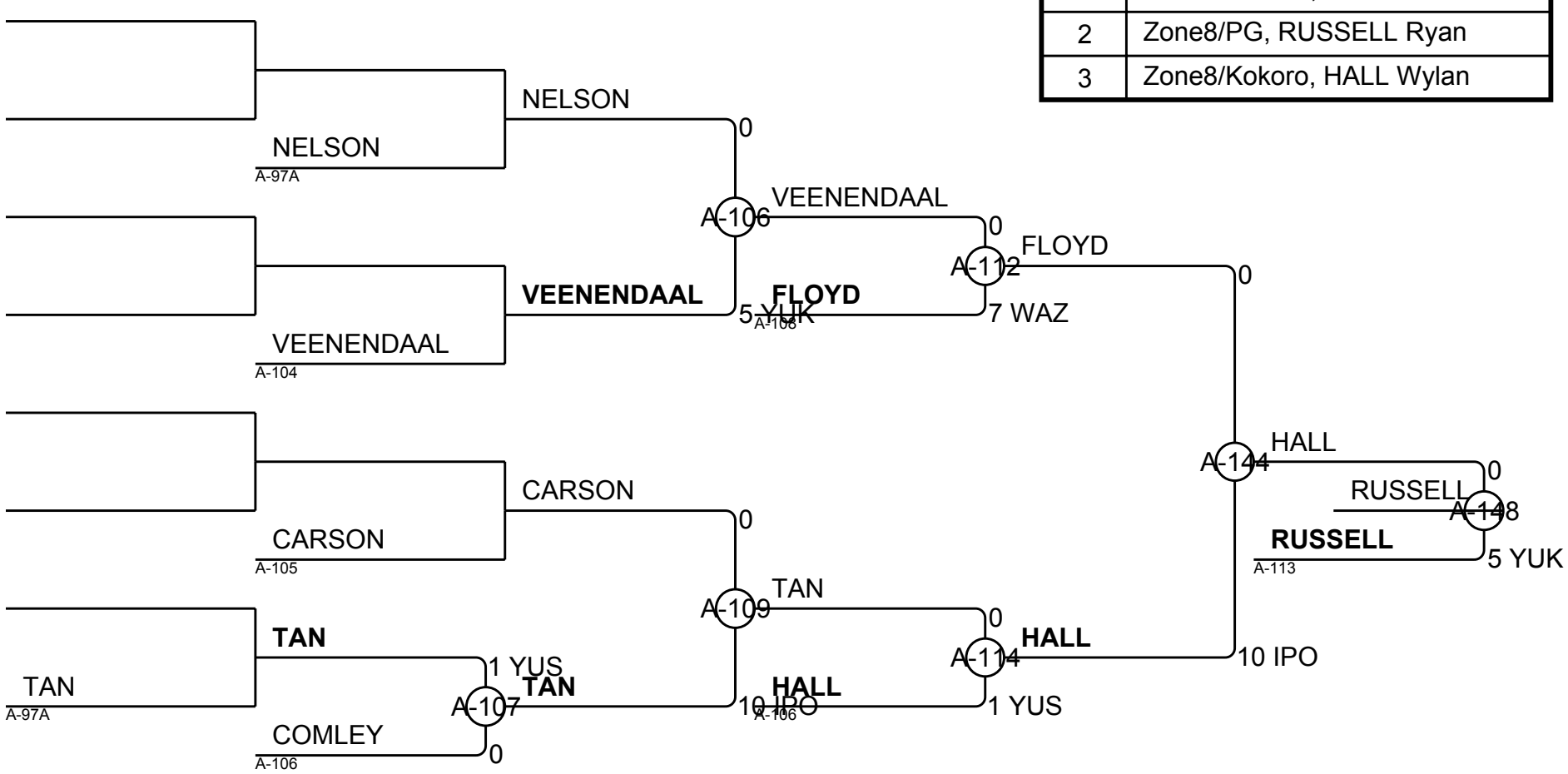
Pos	Name
1	Zone2/Vernon, YAKURA Brendan
2	Zone8/PG, RUSSELL Ryan
3	Zone8/Kokoro, HALL Wylan